Only for 12V(14PIN)

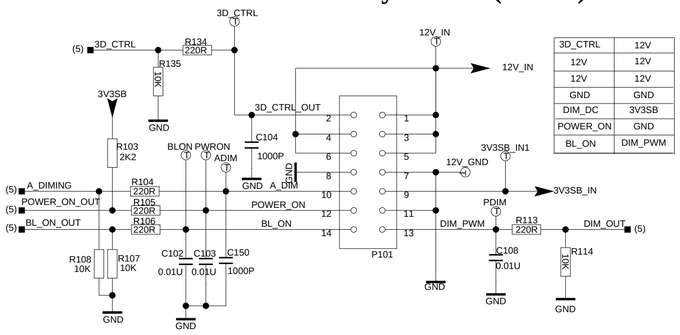

3D_CTRL	12V
12V	12V
12V	12V
GND	GND
DIM_DC	3V3SB
POWER_ON	GND
BL_ON	DIM_PWM

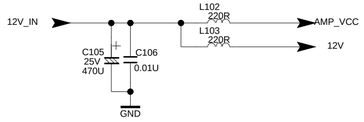

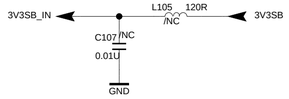

IR

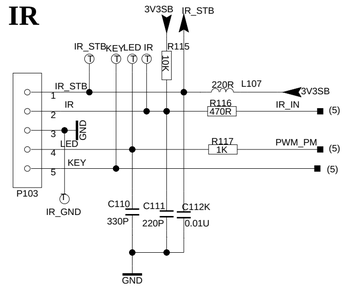

IR with LS

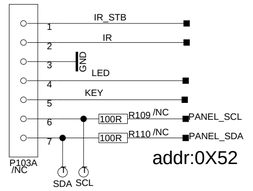

addr:0X52

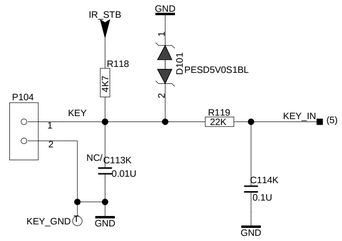

5V to 1V8

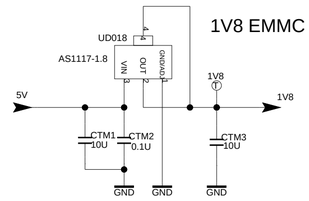

12V to 5V

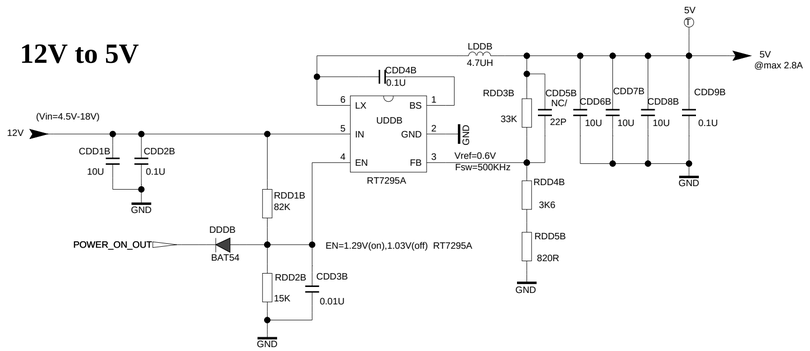

5V TO 1.1V_VDDC

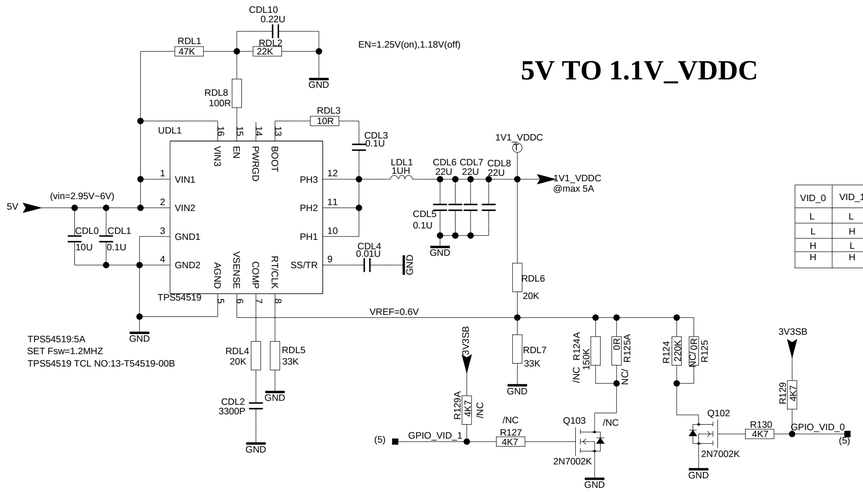

VID_0	VID_1	R2	1V1_VDDC
L	L	33K	0.951V
L	H	28.696K	1.02V
H	L	27.049K	1.05V
H	H	24.087K	1.10V

5V to 3V3

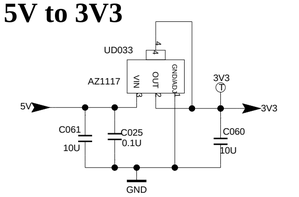

12V to 3V3SB

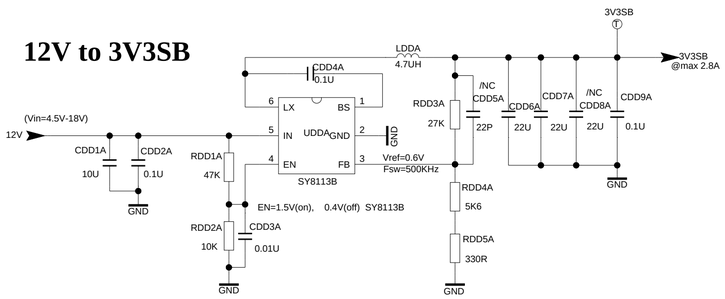

3V3SB to 1V2_DDR

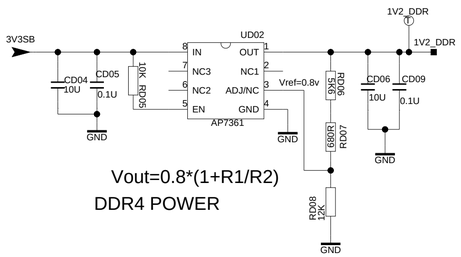

Vout=0.8*(1+R1/R2)

DDR4 POWER

12V to CORE_POWER

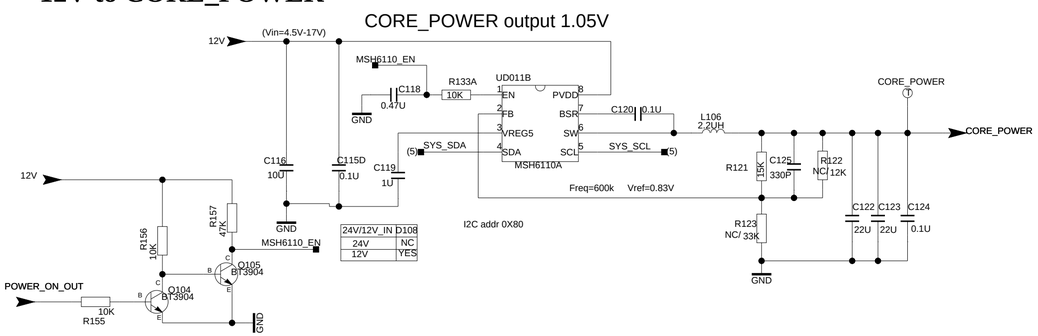

3V3SB to 1V5_DDR

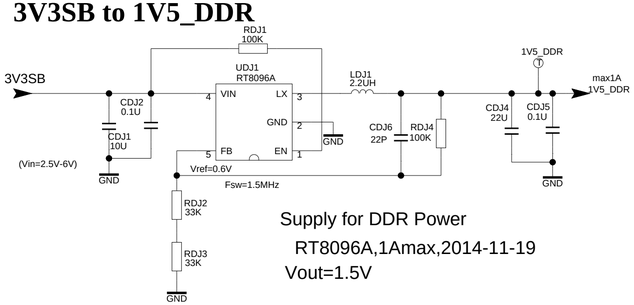

Supply for DDR Power

RT8096A,1Amax,2014-11-19

Vout=1.5V

3V3SB to 2V5_DDR

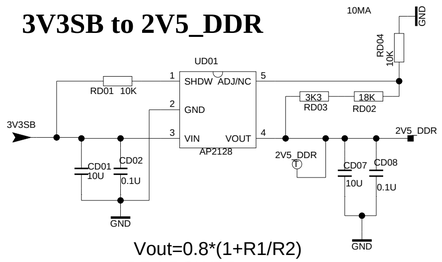

Vout=0.8*(1+R1/R2)

DDR4 POWER

MXL661

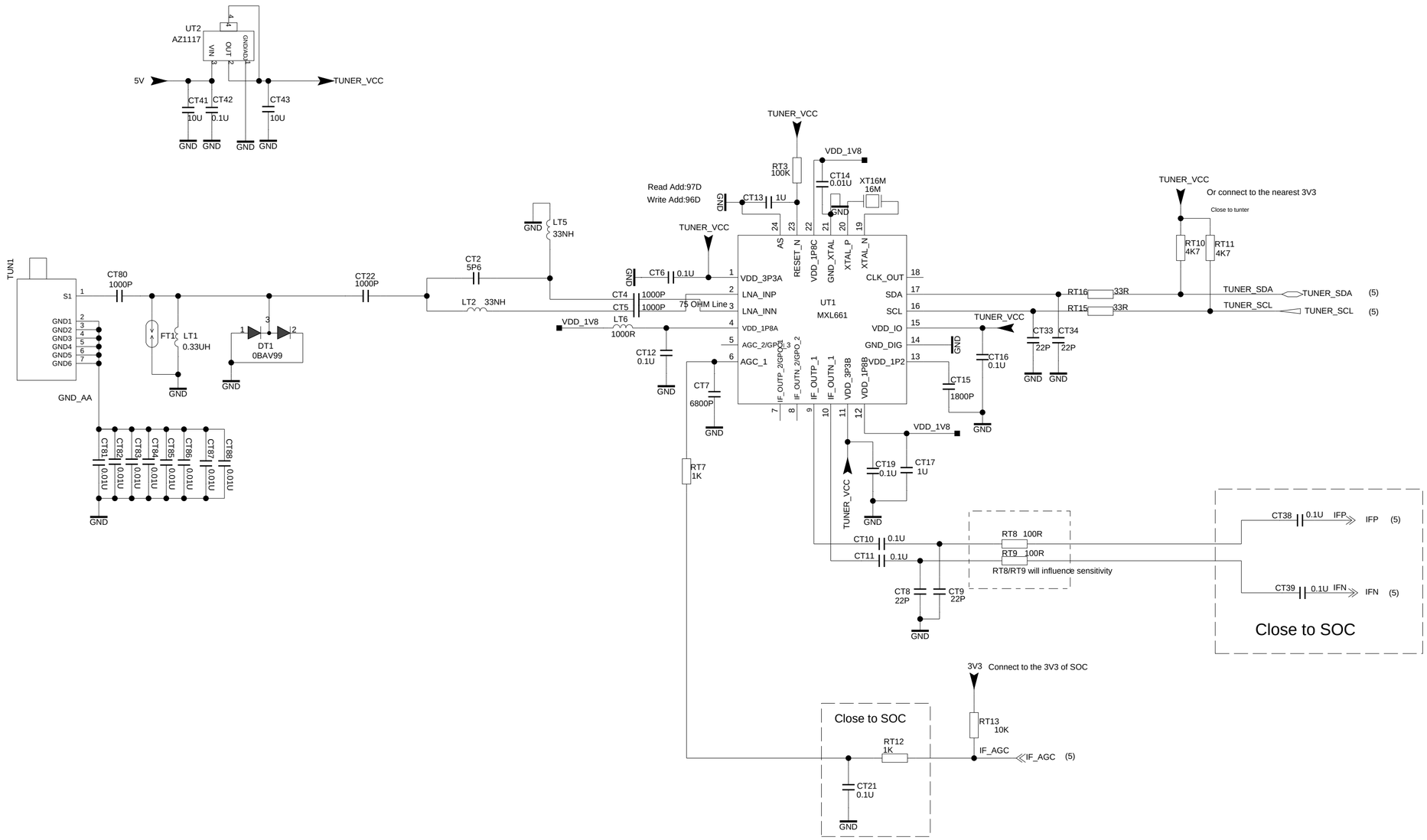

Index-Lab	DATE	NAME	DESCRIPTION	Last modif

Last saved :

SBU :

TCLNO: .....

DESIGNATION

DESIGNATION

TCL Thomson Electronics Singapore Pte. Ltd.
8 Jurong Hall Road #28-01/06
The JTC Summit SINGAPORE 609434
Tel (65) 63092900 Fax (65) 63092999

DRAWN	CHECKED	PAGE:
ON:	ON:	OF :
BY:	BY:	

THIS DRAWING CANNOT BE COMMUNICATED TO UNAUTHORIZED PERSONS COPIED UNLESS PERMITTED IN WRITING

FORMAT DIN A2

AV in

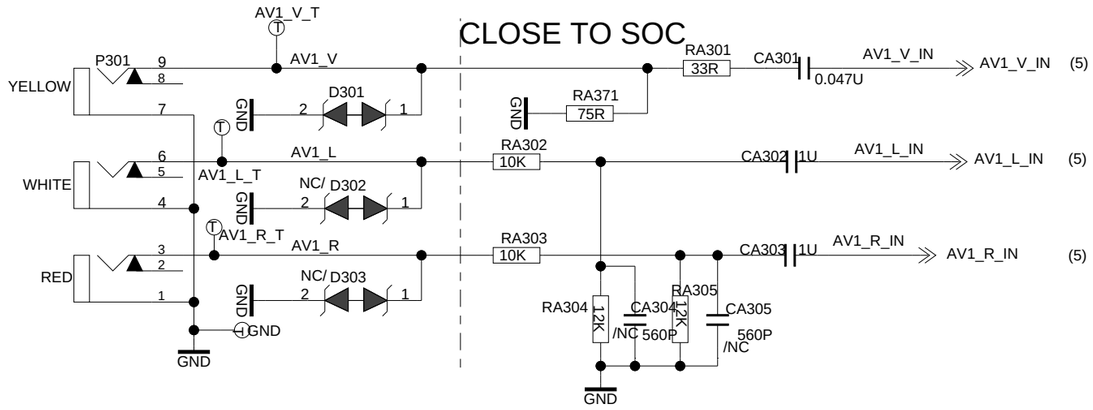

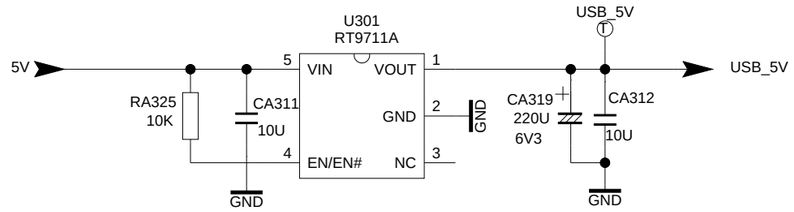

USB2.0

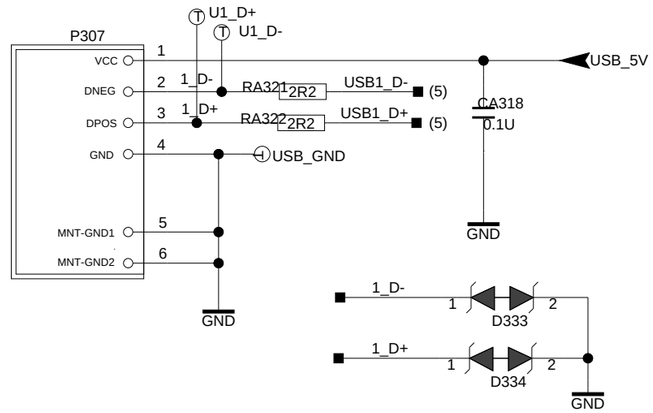

Audio+SPDIF

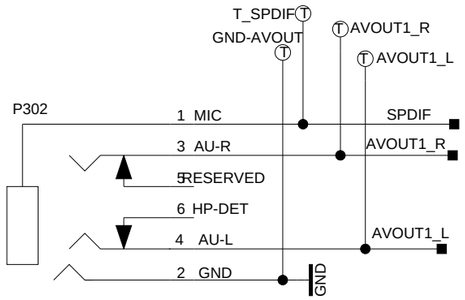

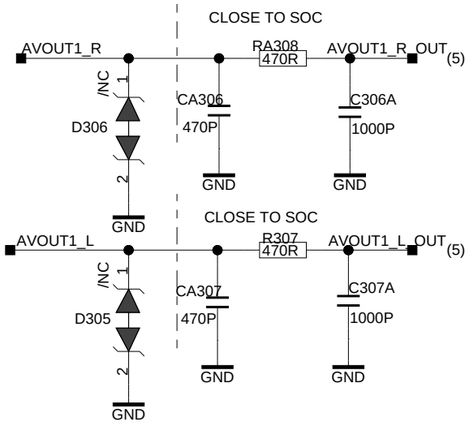

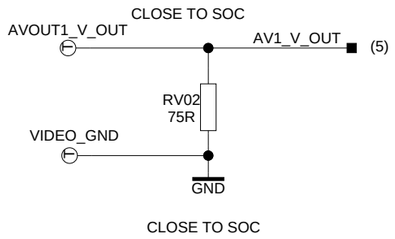

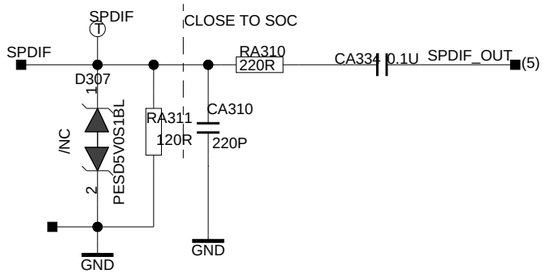

USB2.0+UART

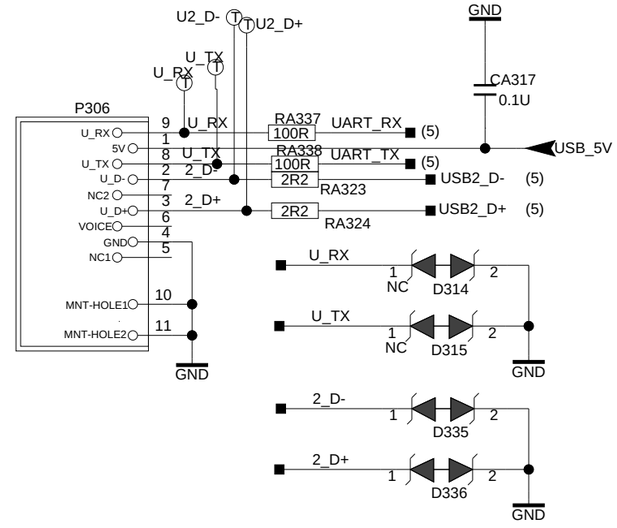

UART

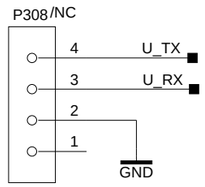

HDMI 1

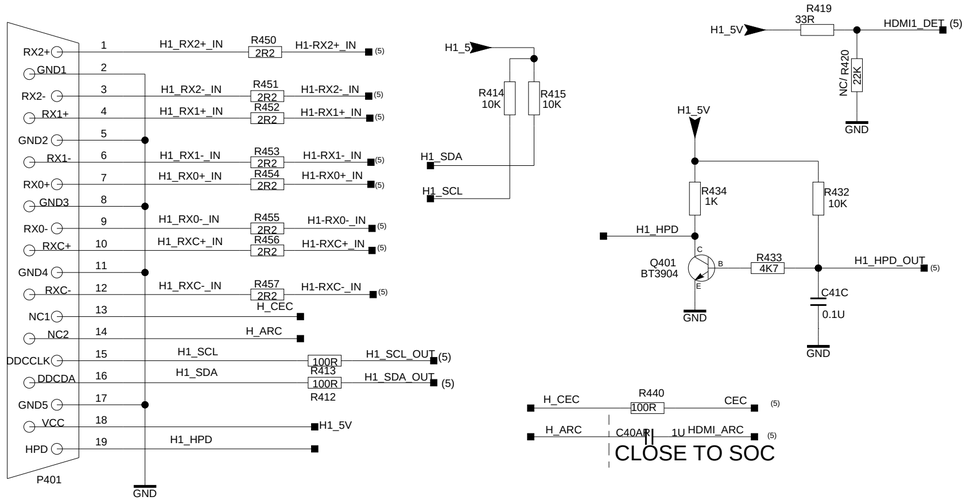

HDMI 2

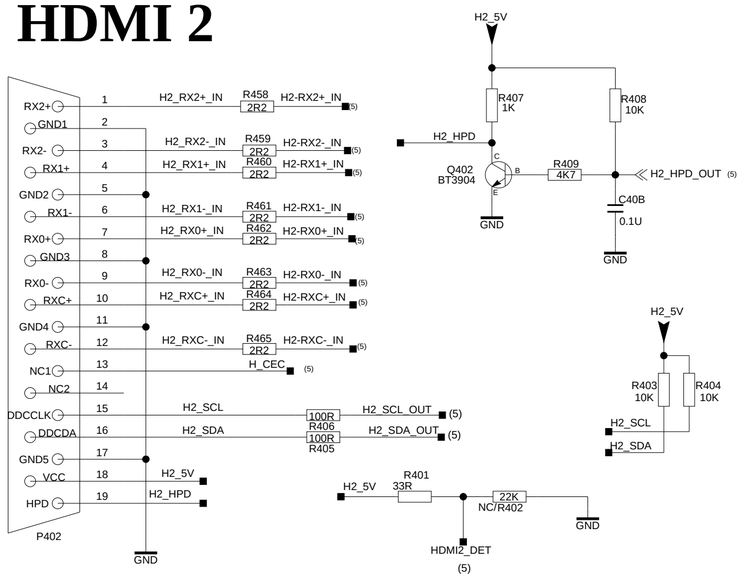

HDMI1 ESD Protection

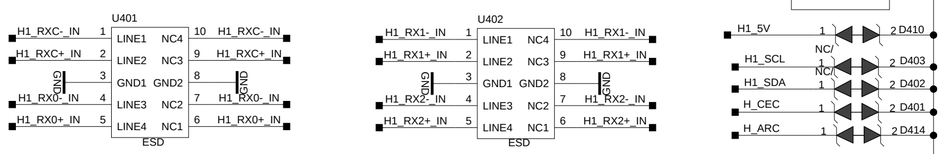

HDMI2 ESD Protection

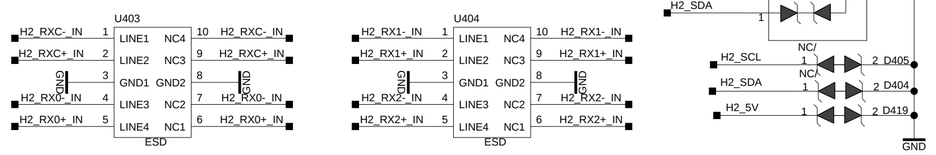

HDMI3 ESD Protection

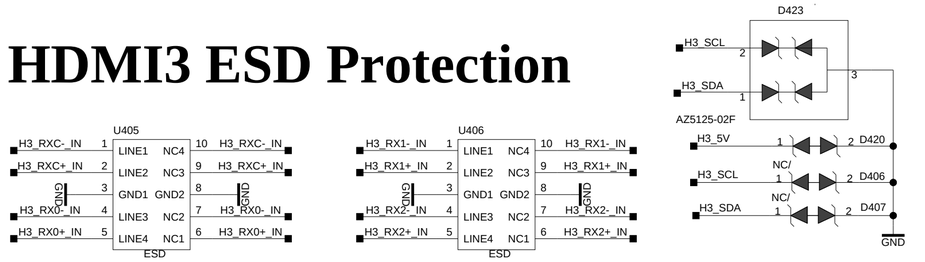

HDMI 3

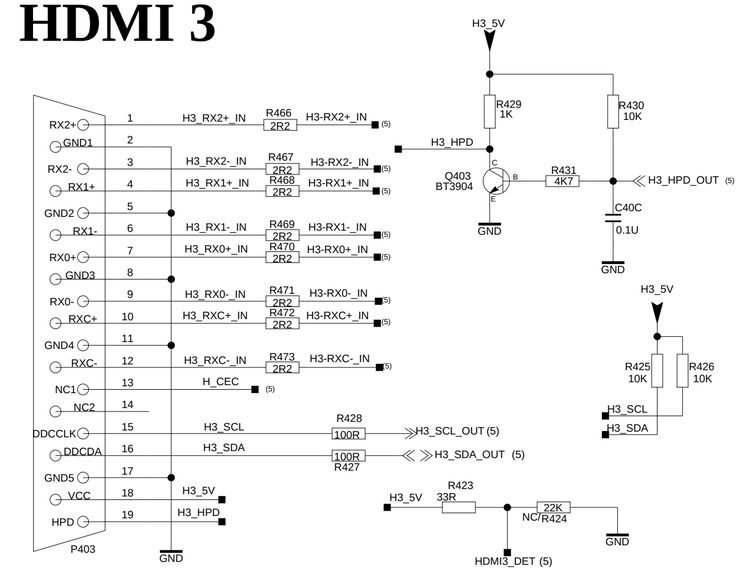

...	DD-MM	...	...	...	SBU :
...	DD-MM	...	...	...	TCLNO:
...	DD-MM	...	...	...	.....
...	DD-MM	...	...	...	DESIGNATION
Index-Lab	DATE	NAME	DESCRIPTION	Last modif	.....

Last saved : 4-14-2009_15:28

TCL

ADDRESS1
ADDRESS2
ADDRESS3
TELEPHONE

DRAWN	CHECKED	PAGE:
ON:	ON: DD-MM-YY	
BY:	BY:	OF :

THIS DRAWING CANNOT BE COMMUNICATED TO UNAUTHORIZED PERSONS COPIED UNLESS PERMITTED IN WRITING

FORMAT DIN A2

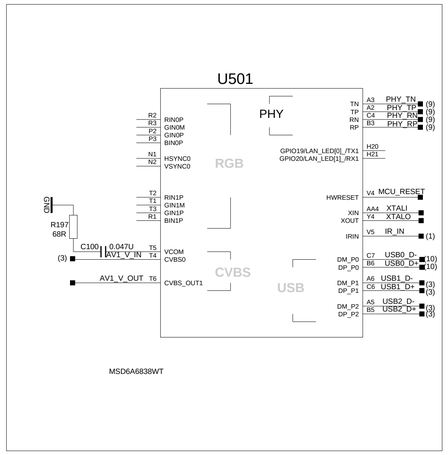
U501
PHY
RGB
CVBS
USB
R2 RIN0P
R3 GIN0M
P2 GIN0P
P3 BIN0P
N1 HSYNC0
N2 VSYNC0
T2 RIN1P
T3 GIN1M
R1 GIN1P
BIN1P
C100 0.047U
AV1_V_IN T4
VCOM
AV1_V_OUT T6
CVBS_OUT1
A3 PHY_TN
A2 PHY_TP
C4 PHY_RN
B3 PHY_RP
TN TP RN RP
GPIO19/LAN_LED[0]_/TX1
GPIO20/LAN_LED[1]_/RX1
H20
H21
HWRESET V4 MCU_RESET
XIN AA4 XTALI
XOUT Y4 XTALO
IRIN V5 IR_IN
DM_P0 C7 USB0_D-
DP_P0 B6 USB0_D+
DM_P1 A6 USB1_D-
DP_P1 C6 USB1_D+
DM_P2 A5 USB2_D-
DP_P2 B5 USB2_D+
R197 68R
C100 0.047U
MSD6A6838WT

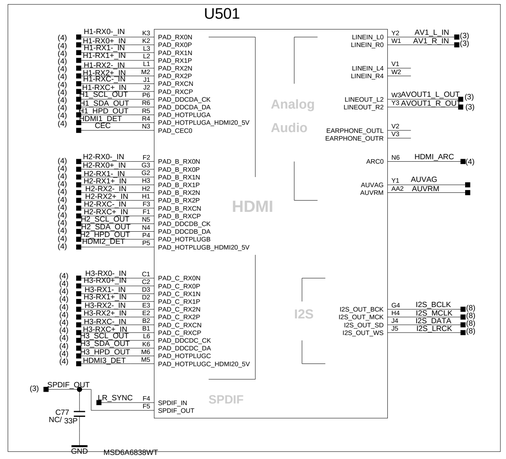
U501
Analog Audio
HDMI
I2S
SPDIF
H1-RX0- IN K3 PAD_RX0N
H1-RX0+ IN K2 PAD_RX0P
H1-RX1- IN L3 PAD_RX1N
H1-RX1+ IN L2 PAD_RX1P
H1-RX2- IN L1 PAD_RX2N
H1-RX2+ IN M2 PAD_RX2P
H1-RXC- IN J1 PAD_RXCN
H1-RXC+ IN J2 PAD_RXCP
H1_SCL_OUT P6 PAD_DDCDA_CK
H1_SDA_OUT R6 PAD_DDCDA_DA
H1_HPD_OUT R5 PAD_HOTPLUGA
HDMI1_DET R4 PAD_HOTPLUGA_HDMI20_5V
CEC N3 PAD_CEC0
H2-RX0- IN F2 PAD_B_RX0N
H2-RX0+ IN G3 PAD_B_RX0P
H2-RX1- IN G2 PAD_B_RX1N
H2-RX1+ IN H3 PAD_B_RX1P
H2-RX2- IN H2 PAD_B_RX2N
H2-RX2+ IN H1 PAD_B_RX2P
H2-RXC- IN F3 PAD_B_RXCN
H2-RXC+ IN F1 PAD_B_RXCP
H2_SCL_OUT N6 PAD_DDCDB_CK
H2_SDA_OUT N4 PAD_DDCDB_DA
H2_HPD_OUT P4 PAD_HOTPLUGB
HDMI2_DET P5 PAD_HOTPLUGB_HDMI20_5V
H3-RX0- IN C1 PAD_C_RX0N
H3-RX0+ IN C2 PAD_C_RX0P
H3-RX1- IN D3 PAD_C_RX1N
H3-RX1+ IN D2 PAD_C_RX1P
H3-RX2- IN E3 PAD_C_RX2N
H3-RX2+ IN E2 PAD_C_RX2P
H3-RXC- IN B2 PAD_C_RXCN
H3-RXC+ IN B1 PAD_C_RXCP
H3_SCL_OUT L6 PAD_DDCDC_CK
H3_SDA_OUT K6 PAD_DDCDC_DA
H3_HPD_OUT M6 PAD_HOTPLUGC
HDMI3_DET M5 PAD_HOTPLUGC_HDMI20_5V
LINEIN_L0 Y2 AV1_L_IN
LINEIN_R0 W1 AV1_R_IN
LINEIN_L4 V1
LINEIN_R4 W2
LINEOUT_L2 W3 AVOUT1_L_OUT
LINEOUT_R2 Y3 AVOUT1_R_OUT
EARPHONE_OUTL V2
EARPHONE_OUTR V3
ARC0 N5 HDMI_ARC
AUVAG Y1 AUVAG
AUVRM AA2 AUVRM
I2S_OUT_BCK G4 I2S_BCLK
I2S_OUT_MCK H4 I2S_MCLK
I2S_OUT_SD J4 I2S_DATA
I2S_OUT_WS J5 I2S_LRCK
SPDIF_OUT
SPDIF_IN F4
SPDIF_OUT F5
C77 33P
MSD6A6838WT

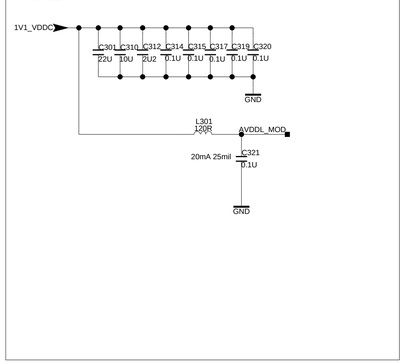
CORE
1V1_VDDC
C301 22U
C310 10U
C312 2U
C314 0.1U
C315 0.1U
C317 0.1U
C319 0.1U
C320 0.1U
GND
L301 1OR
AVDDL_MOD
20mA 25mil
C321 0.1U

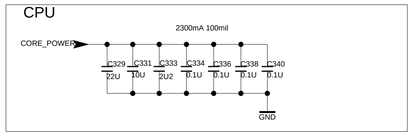
CPU
CORE_POWER
2300mA 100mil
C329 22U
C331 10U
C333 2U
C334 0.1U
C336 0.1U
C338 0.1U
C340 0.1U
GND

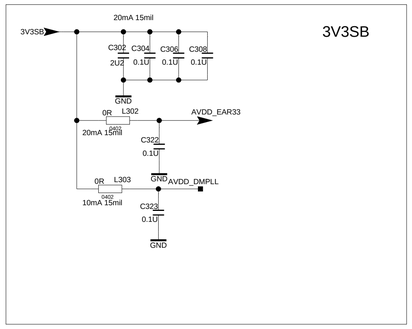
3V3SB
20mA 15mil
C302 2U2
C304 0.1U
C306 0.1U
C308 0.1U
GND
0R L302
0402
AVDD_EAR33
20mA 15mil
C322 0.1U
0R L303
0402
10mA 15mil
GND
AVDD_DMPLL
C323 0.1U
GND

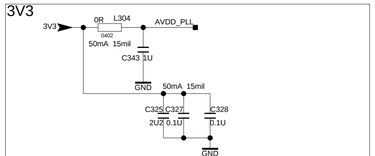
3V3
3V3
0R L304
0402
AVDD_PLL
50mA 15mil
C343 1U
GND
50mA 15mil
C325 2U2
C327 0.1U
C328 0.1U
GND

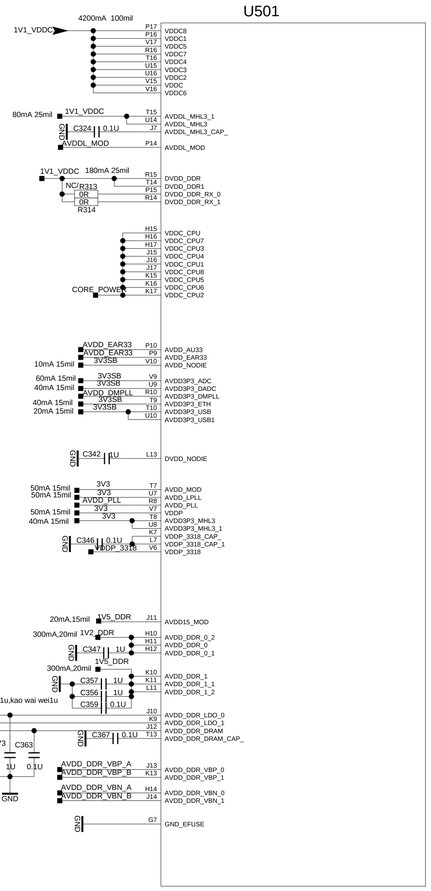
U501
1V1_VDDC
4200mA 100mil
VDDC8 P17
VDDC1 P16
VDDC5 V17
VDDC7 R16
VDDC4 T16
VDDC3 U15
VDDC2 U16
VDDC V15
VDDC6 V16
80mA 25mil
1V1_VDDC
C324 0.1U
AVDDL_MOD
AVDDL_MHL3_1 T15
AVDDL_MHL3 U14
AVDDL_MHL3_CAP_ J7
AVDDL_MOD P14
1V1_VDDC 180mA 25mil
NC/R313
0R
0R
R314
DVDD_DDR R15
DVDD_DDR1 T12
DVDD_DDR_R0 P13
DVDD_DDR_RX_1 R14
VDDC_CPU H15
VDDC_CPU7 H16
VDDC_CPU3 H17
VDDC_CPU4 J15
VDDC_CPU1 J16
VDDC_CPU8 J17
VDDC_CPU5 K15
VDDC_CPU6 K16
VDDC_CPU2 K17
CORE_POWER
AVDD_EAR33 P10
AVDD_EAR33 P9
3V3SB V10
AVDD_AU33
AVDD_EAR33
AVDD_NODIE
10mA 15mil
60mA 15mil
40mA 15mil
3V3SB V9
3V3SB U9
AVDD_DMPLL R10
3V3SB T9
40mA 15mil
20mA 15mil
3V3SB T10
AVDD3P3_ADC
AVDD3P3_DADC
AVDD3P3_DMPLL
AVDD3P3_ETH
AVDD3P3_USB
AVDD3P3_USB1
C342 1U
DVDD_NODIE L13
50mA 15mil
50mA 15mil
3V3 T7
3V3 U7
AVDD_PLL R8
AVDD_MOD
AVDD_LPLL
AVDD_PLL
VDDP
AVDD3P3_MHL3
AVDD3P3_MHL3_1
VDDP_3318_CAP_
VDDP_3318_CAP_1
VDDP_3318
50mA 15mil
40mA 15mil
3V3 T8
3V3 U8
K7
C346 0.1U
VDDP_3318 V8
20mA,15mil
1V5_DDR J11
AVDD15_MOD
300mA,20mil
1V2_DDR H10
AVDD_DDR_0_2
AVDD_DDR_0
H11
H12
AVDD_DDR_0_1
C347 1U
1V5_DDR
300mA,20mil
C352 1U
C356 1U
C359 0.1U
AVDD_DDR_1
AVDD_DDR_1_1
AVDD_DDR_1_2
K10
K11
L11
c356/c357/c359,SOCxia wei1u+0.1u,kao wai wei1u
1V5_DDR
J10
AVDD_DDR_LDO_0
AVDD_DDR_LDO_1
K3
J12
AVDD_DDR_DRAM
AVDD_DDR_DRAM_CAP_
C368 1U
C373 1U
C363 0.1U
C367 0.1U
T13
AVDD_DDR_VBP_A J13
AVDD_DDR_VBP_B K13
AVDD_DDR_VBP_0
AVDD_DDR_VBP_1
AVDD_DDR_VBN_A H14
AVDD_DDR_VBN_B J14
AVDD_DDR_VBN_0
AVDD_DDR_VBN_1
G7
GND_EFUSE
MSD6A6838WT

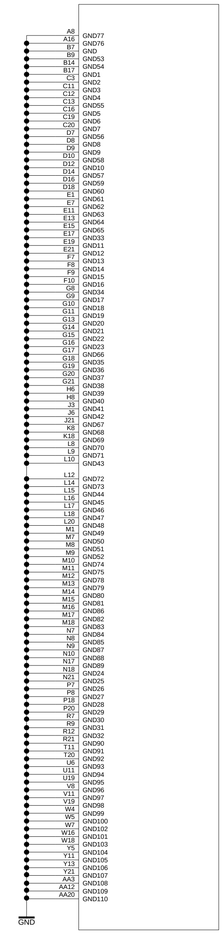
U501
A8 GND77
A16 GND78
B7 GND
B9 GND53
B14 GND54
B17 GND1
C3 GND2
C11 GND3
C12 GND4
C13 GND55
C16 GND5
C19 GND6
C20 GND7
D7 GND56
D8 GND8
D9 GND9
D10 GND58
D12 GND10
D14 GND57
D16 GND59
D18 GND60
E1 GND61
E7 GND62
E11 GND63
E13 GND64
E15 GND65
E17 GND66
E21 GND11
F7 GND12
F8 GND13
F9 GND14
F10 GND17
G8 GND16
G9 GND18
G10 GND17
G11 GND19
G13 GND20
G14 GND21
G15 GND22
G16 GND23
G17 GND66
G18 GND35
G19 GND36
G20 GND37
G21 GND38
H6 GND39
H8 GND40
J3 GND41
J6 GND42
J21 GND67
K8 GND68
K18 GND69
L8 GND70
L9 GND71
L10 GND43
L12 GND72
L14 GND73
L15 GND44
L16 GND45
L17 GND46
L18 GND47
L20 GND48
M1 GND49
M7 GND50
M8 GND51
M9 GND52
M10 GND74
M11 GND75
M12 GND78
M13 GND79
M14 GND80
M15 GND81
M16 GND86
M17 GND82
M18 GND83
N7 GND84
N8 GND85
N9 GND87
N10 GND88
N17 GND89
N18 GND24
N21 GND25
P7 GND26
P8 GND27
P18 GND28
P20 GND29
R7 GND30
R9 GND31
R12 GND32
R21 GND90
T11 GND91
T20 GND92
U6 GND93
U11 GND94
U19 GND95
V6 GND96
V11 GND97
V19 GND98
W4 GND99
W5 GND100
W7 GND102
W16 GND101
W18 GND103
Y5 GND104
Y11 GND105
Y13 GND106
Y21 GND107
AA3 GND108
AA12 GND109
AA20 GND110
GND
MSD6A6838WT

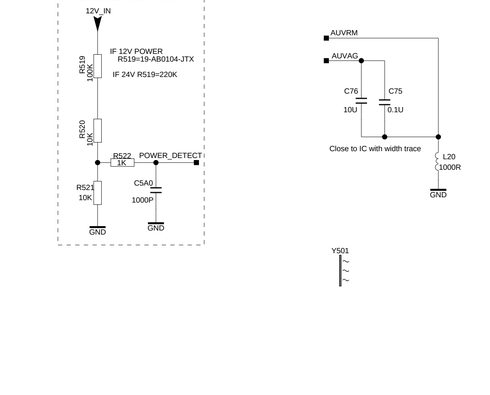
U501
PWM
SAR
Vx1/LVDS
GPIO /UART
I2C
PM_GPIO
DIM_OUT U18 BRI_ADJ
A_DIMING U17 PWM2
PWM_PM L5 PWM_PM
KEY_IN C5 SAR0
LS_IN D4 SAR1
PANEL_ON B4 PANEL_ON/OFF
ON/OFF D6 SAR3
POWER_DETECT C6
UART_RX F6 DDCA_CK/UART0_RX
UART_TX E6 DDCA_DA/UART0_TX
SYS_SCL E5 DDCR_CK
SYS_SDA E4 DDCR_DA
GPIO_VID_0 G5 VID0
GPIO_VID_1 G6 VID1
AGING_HOLD T17 GPIO9/TCON[4]
AGING T18 GPIO10/TCON[5]
SD_CTRL R17 GPIO11/TCON[6]
NWR R18 GPIO12/TCON[7]
SPI_DI H18 GPIO2/SPI2_DI
SPI_CS H19 GPIO3/SPI2_CK
SPI_DO J18 GPIO4/SPI1_DI
SPI_CLK J20 GPIO5/SPI1_CK
MOD_TX_P00/VSYNC K21
MOD_TX_N00/HSYNC J19
MOD_TX_P01/CLK K20
MOD_TX_N01/CLK K19
MOD_TX_P02/R_ODD[7] L19
MOD_TX_N02/R_ODD[6] M20
MOD_TX_P03/R_ODD[5] M21
MOD_TX_N03/R_ODD[4] M19
MOD_TX_P04/R_ODD[3]/VX1_0+ N20
MOD_TX_N04/R_ODD[2]/VX1_0- N19
MOD_TX_P05/R_ODD[1]/VX1_1+ P19
MOD_TX_N05/R_ODD[0]/VX1_1- R20
MOD_TX_P06/G_ODD[7]/VX1_2+ R19
MOD_TX_N06/G_ODD[6]/VX1_2- T21
MOD_TX_P07/G_ODD[5]/VX1_3+ T19
MOD_TX_N07/G_ODD[4]/VX1_3- U20
MOD_TX_P08/G_ODD[3]/VX1_4+ V20
MOD_TX_N08/G_ODD[2]/VX1_4- V21
MOD_TX_P09/G_ODD[1]/VX1_5+ W21
MOD_TX_N09/G_ODD[0]/VX1_5- W20
MOD_TX_P10/B_ODD[7]/VX1_6+ Y20
MOD_TX_N10/B_ODD[6]/VX1_6- W19
MOD_TX_P11/B_ODD[5]/VX1_7+ Y19
MOD_TX_N11/B_ODD[4]/VX1_7- AA19
MOD_TX_P12/B_ODD[3]/LOCKN AA18
MOD_TX_N12/B_ODD[2]/HPDN W18
MOD_TX_P13/B_ODD[1] W17
MOD_TX_N13/B_ODD[0] Y17
GPIO_PM[1]/PM_UART_TX U5 WIFI_ON
GPIO_PM[5]/PM_UART_RX U4/WIFI_WAKEUP
GPIO_PM[2] K5 GPIO_PM2
GPIO_PM[9] U2 GPIO_PM9
GPIO_PM[8] J3
GPIO_PM[10] U3 GPIO_PM10
VBL_CTRL L4 BL_ON_OUT
PWR-ON/OFF K4 POWER_ON_OUT
TESTPIN H7
R89 0R
NC/
GND
M_VB5N
M_VB5P
M_VB6N
M_VB6P
M_VB7N
M_VB7P
M_LOCKN
M_HTPDP
(10)
(1)
(2)
(3)
(4)
(8)
GND

U501
EMMC
TS2
SD
Front End
EMMC_D0 AA9 EMMC_IO0
EMMC_D1 W9 EMMC_IO1
EMMC_D2 AA10 EMMC_IO2
EMMC_D3 Y9 EMMC_IO3
EMMC_D4 W8 EMMC_IO4
EMMC_D5 Y8 EMMC_IO5
EMMC_D6 W10 EMMC_IO6
EMMC_D7 Y10 EMMC_IO7
EMMC_DS W11 EMMC_IO8
EMMC_CMD AA13 EMMC_IO9/EMMC_CMD
EMMC_CLK W12 EMMC_IO10/EMMC_CLK
EMMC_RST Y12 EMMC_IO11/EMMC_RSTN
TS2_D0 Y16
TS2_SYNC AA15
TS2_VLD W15
TS2_CLK AA16
NC5 N11
NC6 N16
NC7 N15
NC8 N14
NC R11
NC R13
NC2 P13
NC9 N13
NC10 P11
NC1 N12
NC3 N12
NC4 P12
SD_D0 U13
SD_D1 T12
SD_D2 V13
SD_D3 V14
SD_CLK U12
SD_CMD V12
PANEL_SCL
PANEL_SDA
VIFP AA6 IFP
VIFM Y6 IFN
IF_AGC Y7 IF_AGC
TGPIO0 AA7 TUNER_SCL
TGPIO1 W6 TUNER_SDA
MSD6A6838WT

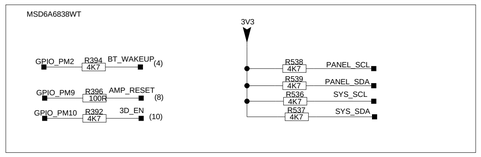
MSD6A6838WT
3V3
GPIO_PM2 R394 4K7 BT_WAKEUP (4)
GPIO_PM9 R396 100R AMP_RESET (8)
GPIO_PM10 R392 4K7 3D_EN (10)
R538 4K7 PANEL_SCL
R539 4K7 PANEL_SDA
R536 4K7 SYS_SCL
R537 4K7 SYS_SDA

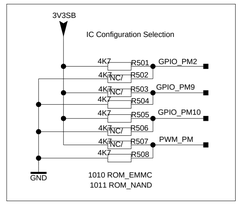
3V3SB
IC Configuration Selection
4K7 NC/ R501 GPIO_PM2
4K7 NC/ R502
4K7 NC/ R503 GPIO_PM9
4K7 NC/ R504
4K7 NC/ R505 GPIO_PM10
4K7 NC/ R506
4K7 NC/ R507 PWM_PM
4K7 R508
GND
1010 ROM_EMMC
1011 ROM_NAND

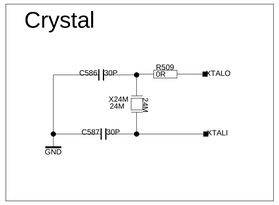
Crystal
C586 30P
R509 0R
KTALO
X24M 24M
C587 30P
KTALI
GND

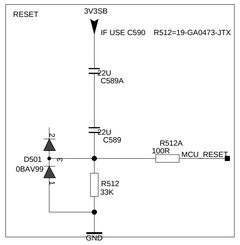
RESET
3V3SB
IF USE C590 R512=19-GA0473-JTX
22U C589A
22U C589
D501 0BAV99
R512A 100R
MCU_RESET
R512 33K
GND

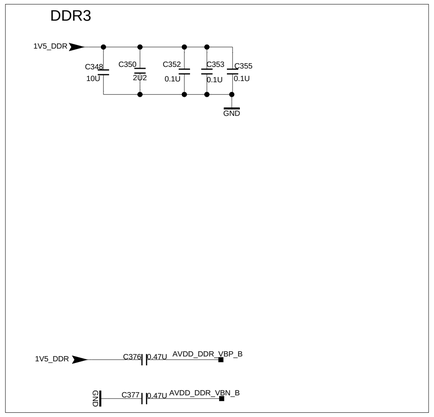
DDR3
1V5_DDR
C348 10U
C350 2U2
C352 0.1U
C353 0.1U
C355 0.1U
GND
1V5_DDR
C376 0.47U
AVDD_DDR_VBP_B
GND
C377 0.47U
AVDD_DDR_VBN_B

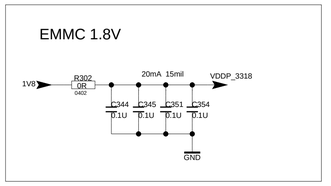
EMMC 1.8V
1V8
R302 0R
0402
20mA 15mil
VDDP_3318
C344 0.1U
C345 0.1U
C351 0.1U
C354 0.1U
GND

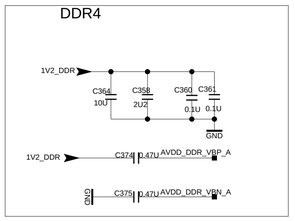
DDR4
1V2_DDR
C364 10U
C358 2U2
C360 0.1U
C361 0.1U
GND
1V2_DDR
C374 0.47U
AVDD_DDR_VBP_A
GND
C375 0.47U
AVDD_DDR_VBN_A

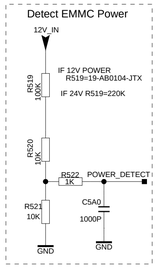
Detect EMMC Power
12V_IN
IF 12V POWER R519=19-AB0104-JTX
IF 24V R519=220K
R519 100K
R520 10K
R522 1K
POWER_DETECT
R521 10K
C5A0 1000P
GND
GND

AUVRM
AUVAG
C76 10U
C75 0.1U
Close to IC with width trace
L20 1000R
GND

Y501

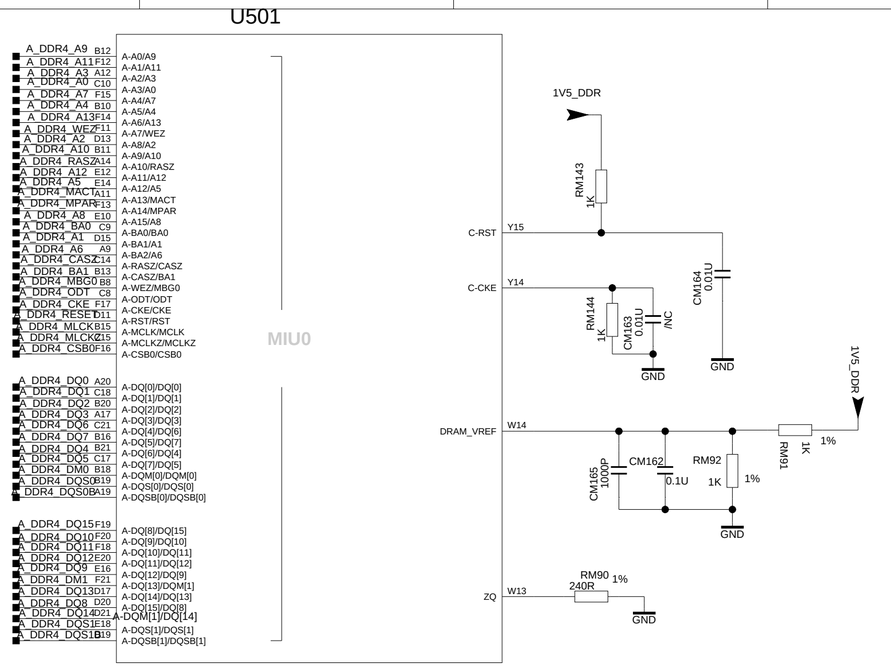

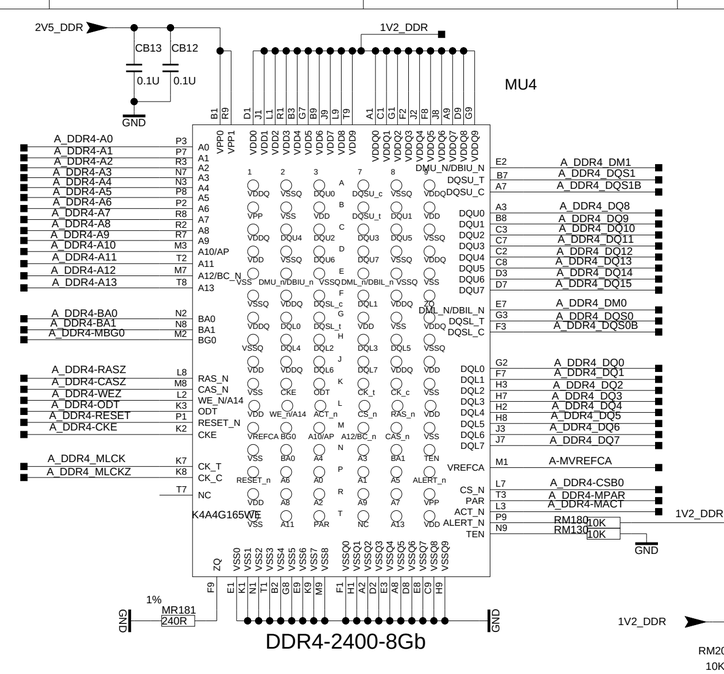

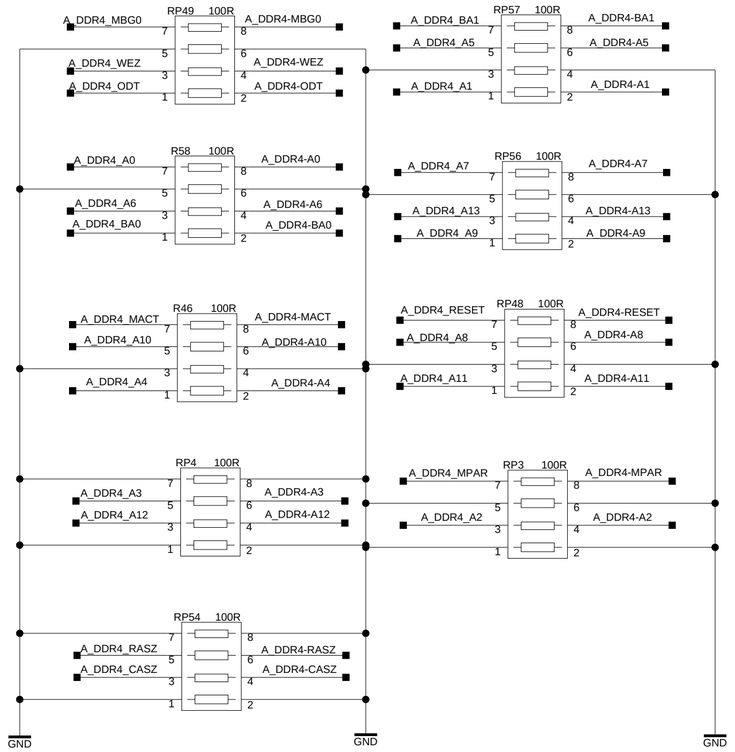

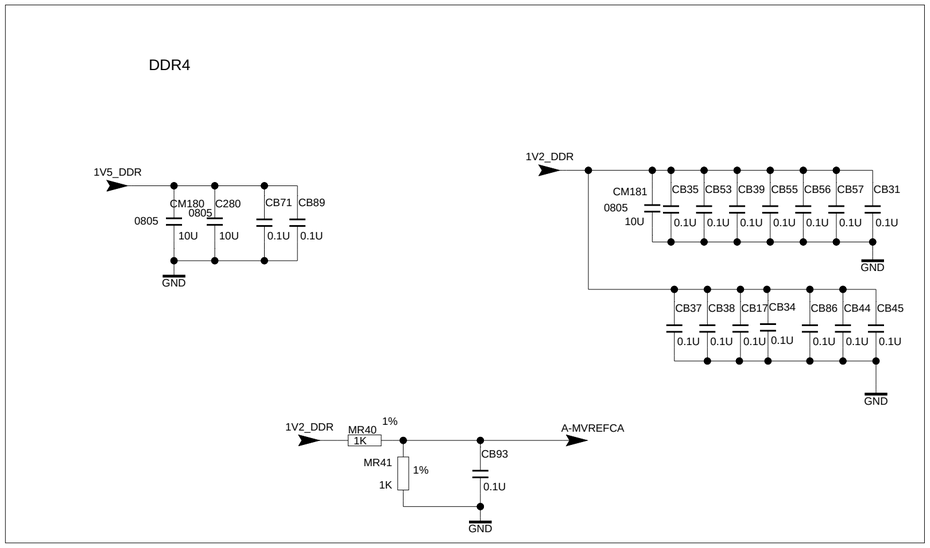

...	DD-MM	...	...	...	SBU :	TCL
...	DD-MM	...	...	...	TCLNO:	ADDRESS1 ADDRESS2 ADDRESS3 TELEPHONE
...	DD-MM	...	...	...	.....	DESIGNATION .....
...	DD-MM	...	...	...		
Index-Lab	**DATE**	**NAME**	**DESCRIPTION**	**Last modif**		

Last saved : 4-14-2009_15:28

DRAWN	CHECKED	PAGE:
ON:	ON: DD-MM-YY	OF :
BY:	BY:	

THIS DRAWING CANNOT BE COMMUNICATED TO UNAUTHORIZED PERSONS COPIED UNLESS PERMITTED IN WRITING

FORMAT DIN A2

EMMC 8G

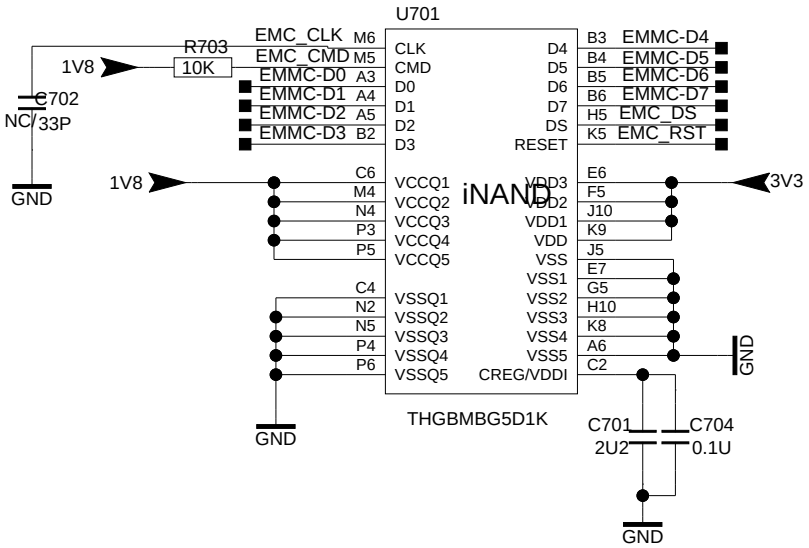

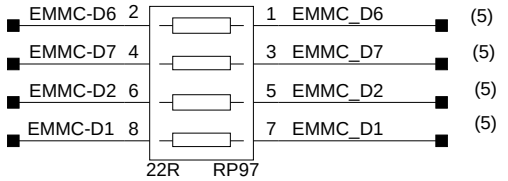

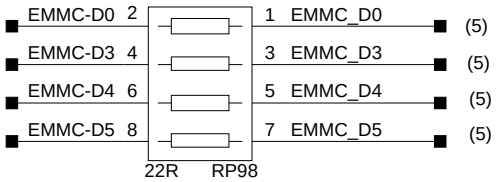

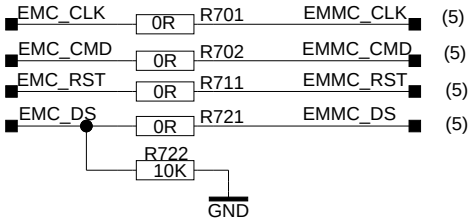

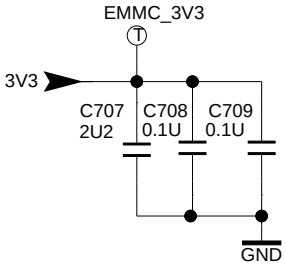

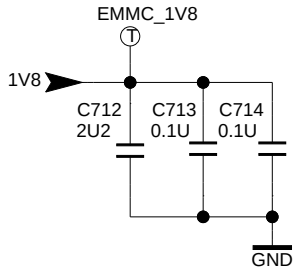

...	DD-MM	...	...	...	SBU :
...	DD-MM	...	...	...	TCLNO:
...	DD-MM	...	...	...	.....
...	DD-MM	...	...	...	DESIGNATION
Index-Lab	DATE	NAME	DESCRIPTION	Last modif	.....

Last saved : 4-14-2009_15:30

TCL

ADDRESS1
ADDRESS2
ADDRESS3
TELEPHONE

DRAWN	CHECKED	PAGE:
ON:	ON: DD-MM-YY	
BY:	BY:	OF :

THIS DRAWING CANNOT BE COMMUNICATED TO UNAUTHORIZED PERSONS COPIEDUNLESS PERMITTED IN WRITING

FORMAT DIN A4

AD82587

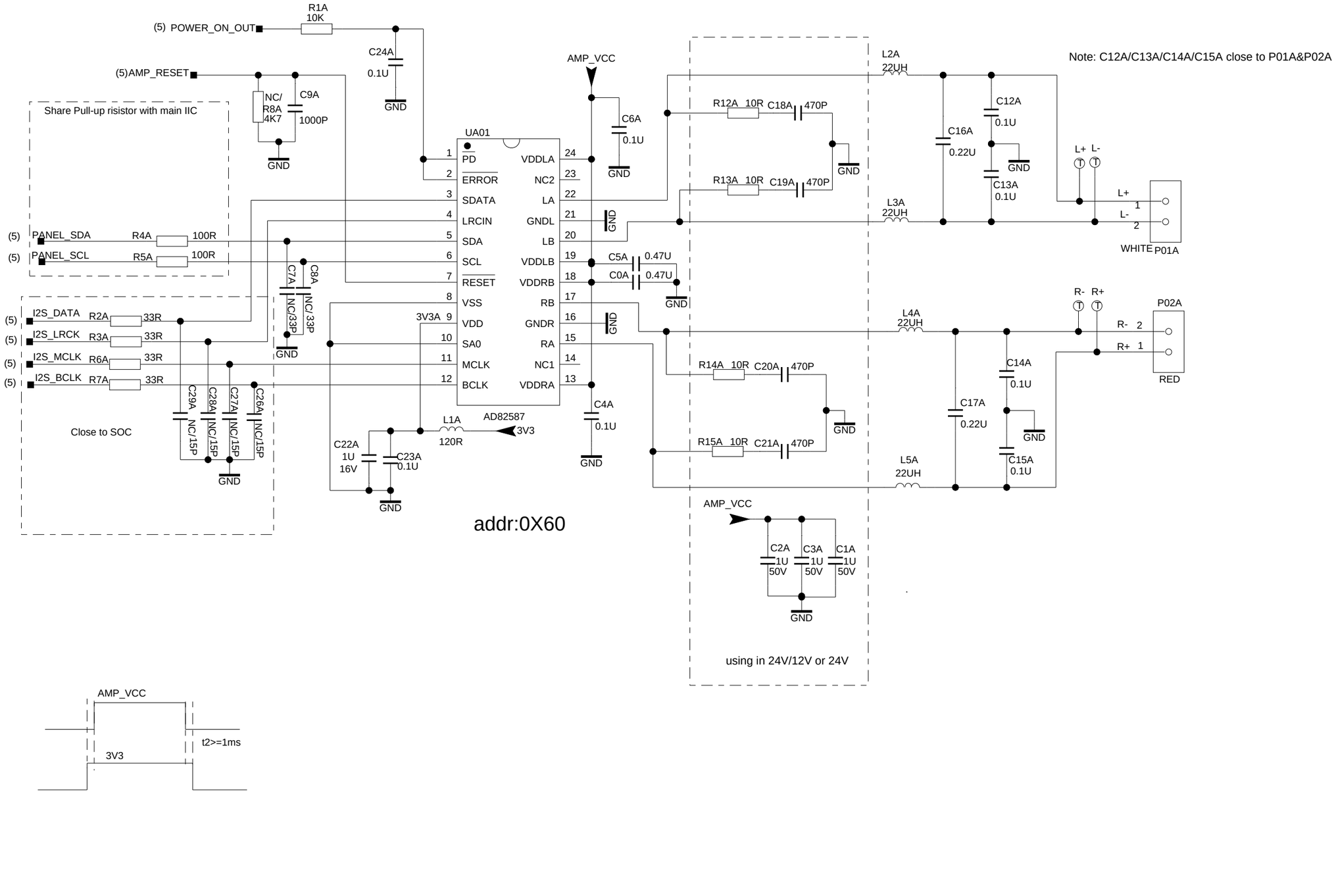
(5) POWER_ON_OUT
R1A 10K
C24A 0.1U
GND
(5)AMP_RESET
NC/ R8A 4K7
C9A 1000P
GND
Share Pull-up risistor with main IIC
(5) PANEL_SDA
R4A 100R
(5) PANEL_SCL
R5A 100R
C7A NC/33P
C8A NC/33P
GND
(5) I2S_DATA R2A 33R
(5) I2S_LRCK R3A 33R
(5) I2S_MCLK R6A 33R
(5) I2S_BCLK R7A 33R
C29A NC/15P
C28A NC/15P
C27A NC/15P
C26A NC/15P
GND
Close to SOC
UA01
1 PD
2 ERROR
3 SDATA
4 LRCIN
5 SDA
6 SCL
7 RESET
8 VSS
3V3A 9
10 SA0
11 MCLK
12 BCLK
24 VDDLA
23 NC2
22 LA
21 GNDL
20 LB
19 VDDLB
18 VDDRB
17 RB
16 GNDR
15 RA
14 NC1
13 VDDRA
AD82587
AMP_VCC
C6A 0.1U
GND
C5A 0.47U
C0A 0.47U
GND
GND
C4A 0.1U
GND
L1A 120R
3V3
C22A 1U 16V
C23A 0.1U
GND
addr:0X60
R12A 10R
C18A 470P
GND
R13A 10R
C19A 470P
GND
L2A 22UH
L3A 22UH
C16A 0.22U
C12A 0.1U
GND
C13A 0.1U
L+ L-
L+ 1
L- 2
WHITE P01A
Note: C12A/C13A/C14A/C15A close to P01A&P02A
R14A 10R
C20A 470P
GND
R15A 10R
C21A 470P
GND
L4A 22UH
L5A 22UH
C17A 0.22U
C14A 0.1U
GND
C15A 0.1U
R- R+
R- 2
R+ 1
P02A
RED
AMP_VCC
C2A 1U 50V
C3A 1U 50V
C1A 1U 50V
GND
using in 24V/12V or 24V
AMP_VCC
3V3
t2>=1ms

INTERNET

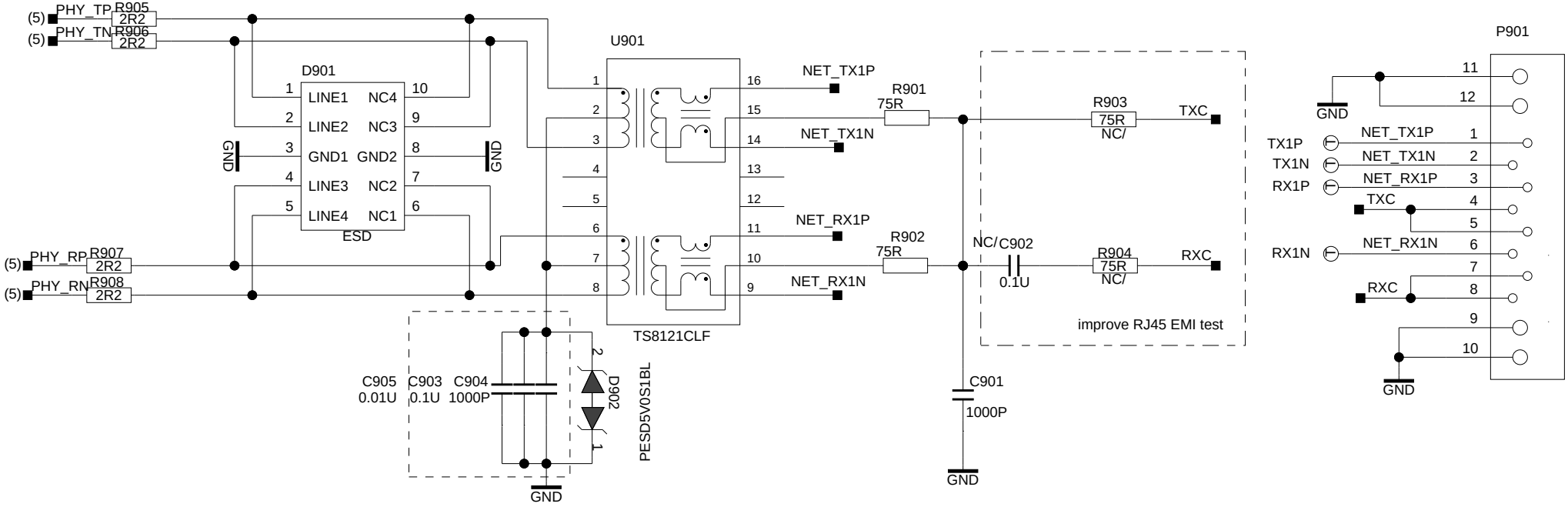

...	DD-MM	...	...	...	SBU :
...	DD-MM	...	...	...	TCLNO:
...	DD-MM	...	...	...	.....
...	DD-MM	...	...	...	DESIGNATION
Index-Lab	DATE	NAME	DESCRIPTION	Last modif	.....

Last saved : 4-14-2009_15:30

TCL

ADDRESS1
ADDRESS2
ADDRESS3
TELEPHONE

DRAWN	CHECKED	PAGE:
ON:	ON: DD-MM-YY	
BY:	BY:	OF :

THIS DRAWING CANNOT BE COMMUNICATED TO UNAUTHORIZED PERSONS COPIEDUNLESS PERMITTED IN WRITING

FORMAT DIN A4

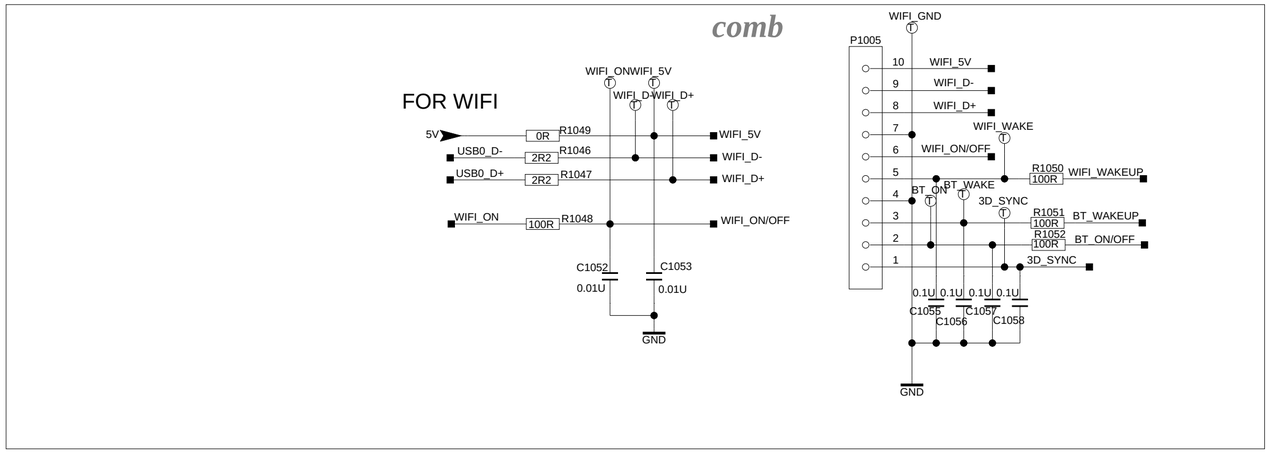

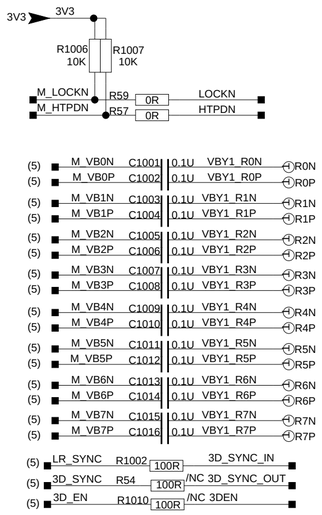

Index-Lab	DATE	NAME	DESCRIPTION	Last modif
...	DD-MM	...	...	...
...	DD-MM	...	...	...
...	DD-MM	...	...	...
...	DD-MM	...	...	...

Last saved : 4-14-2009_15:28

SBU :

TCLNO:

.....

DESIGNATION

.....

TCL

ADDRESS1
ADDRESS2
ADDRESS3
TELEPHONE

DRAWN	CHECKED	PAGE:
ON:	ON: DD-MM-YY	
BY:	BY:	OF :

THIS DRAWING CANNOT BE COMMUNICATED TO UNAUTHORIZED PERSONS COPIED UNLES S PERMITTED IN WRITING

FORMAT DIN A2

"left"and "right"mean viewing from front of panel

To Right Connector of panel

DOWN-XR P1001

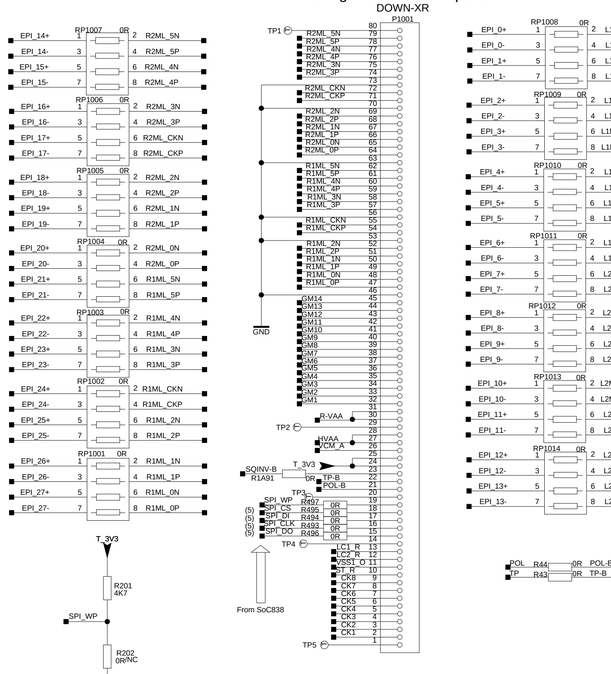

To Left Connector of panel

UP-XL P1002

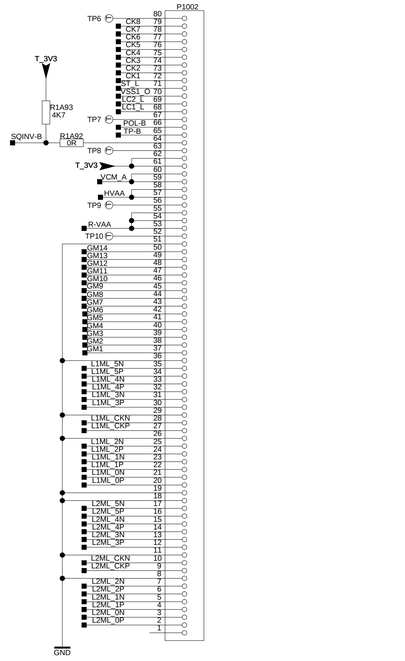

Particular attention:
If need NC device must copy Mstar.
The first edition NC device have no definite value!

LCD Bias Power

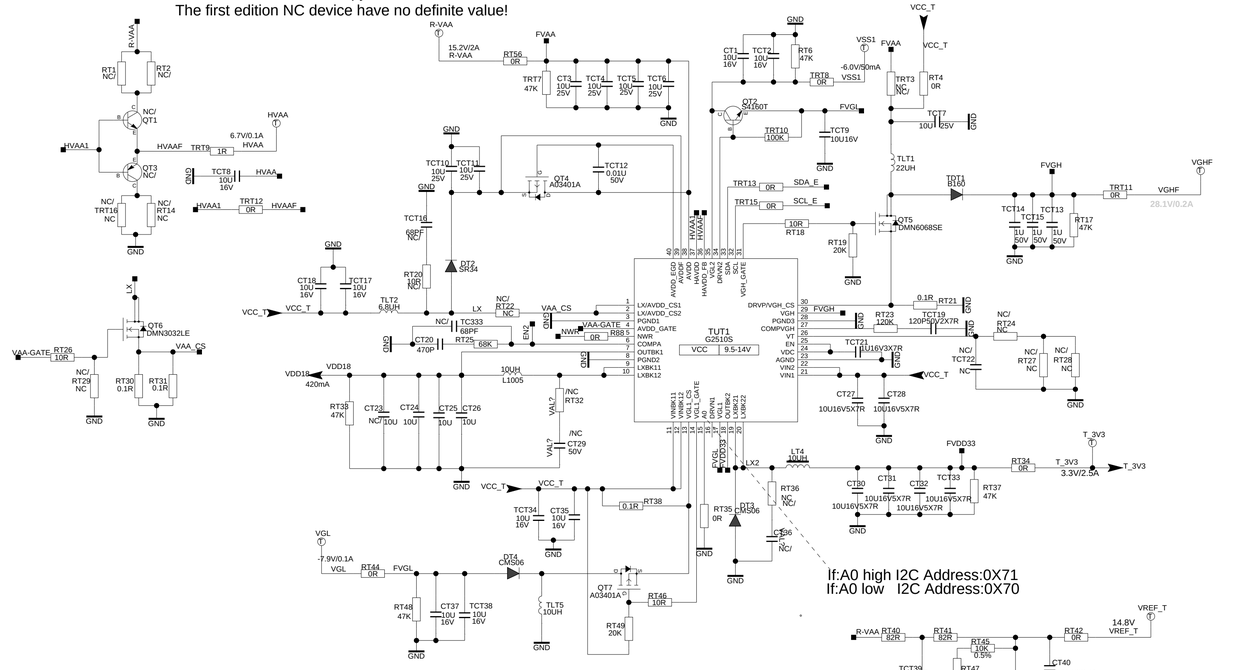

Timing Controller

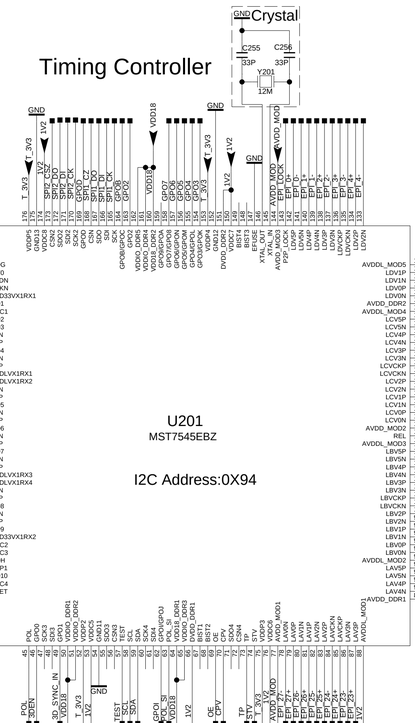

Test Point

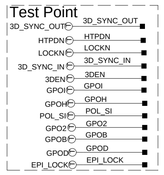

Setting

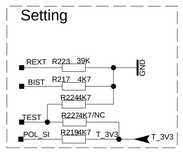

RESET

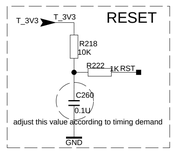

SPI NOR FLASH

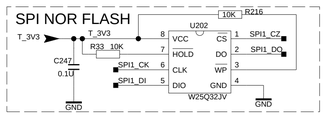

AGING_HOLD R205 100R GPOB
AGING R206 100R/NC BIST

If aging high,t-con will get into bist pattern!(black white R G B)
If aging_hold high,t-con will be push current pattern

Core Power

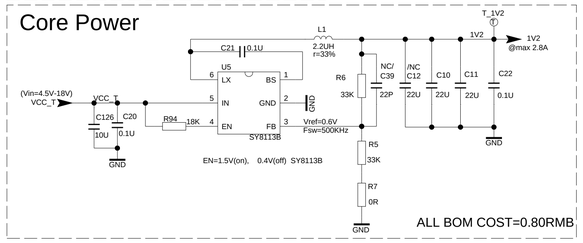

Panel Power Circuit

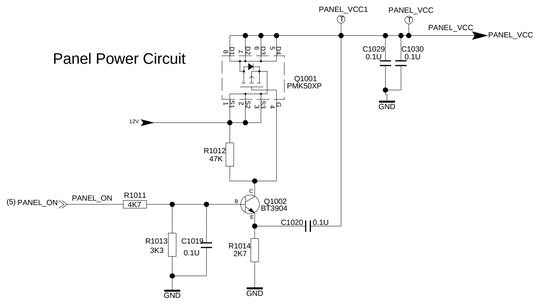

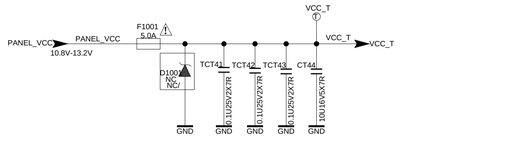

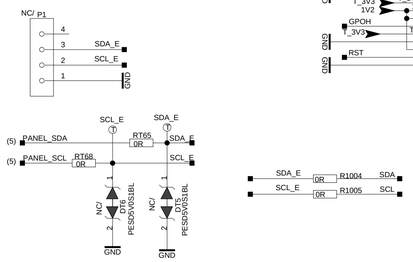

THIS DRAWING CANNOT BE COMMUNICATED TO UNAUTHORIZED PERSONS COPIED UNLESS PERMITTED IN WRITING

...	DD-MM	...	...	...	SBU :
...	DD-MM	...	...	...	TCLNO:
...	DD-MM	...	...	...	.....
...	DD-MM	...	...	...	DESIGNATION
Index-Lab	DATE	NAME	DESCRIPTION	Last modif	.....

Last saved : 4-14-2009_15:30

TCL

ADDRESS1
ADDRESS2
ADDRESS3
TELEPHONE

DRAWN	CHECKED	PAGE:
ON:	ON: DD-MM-YY	
BY:	BY:	OF :

FORMAT DIN A1

Gamma and Vcom Buffer

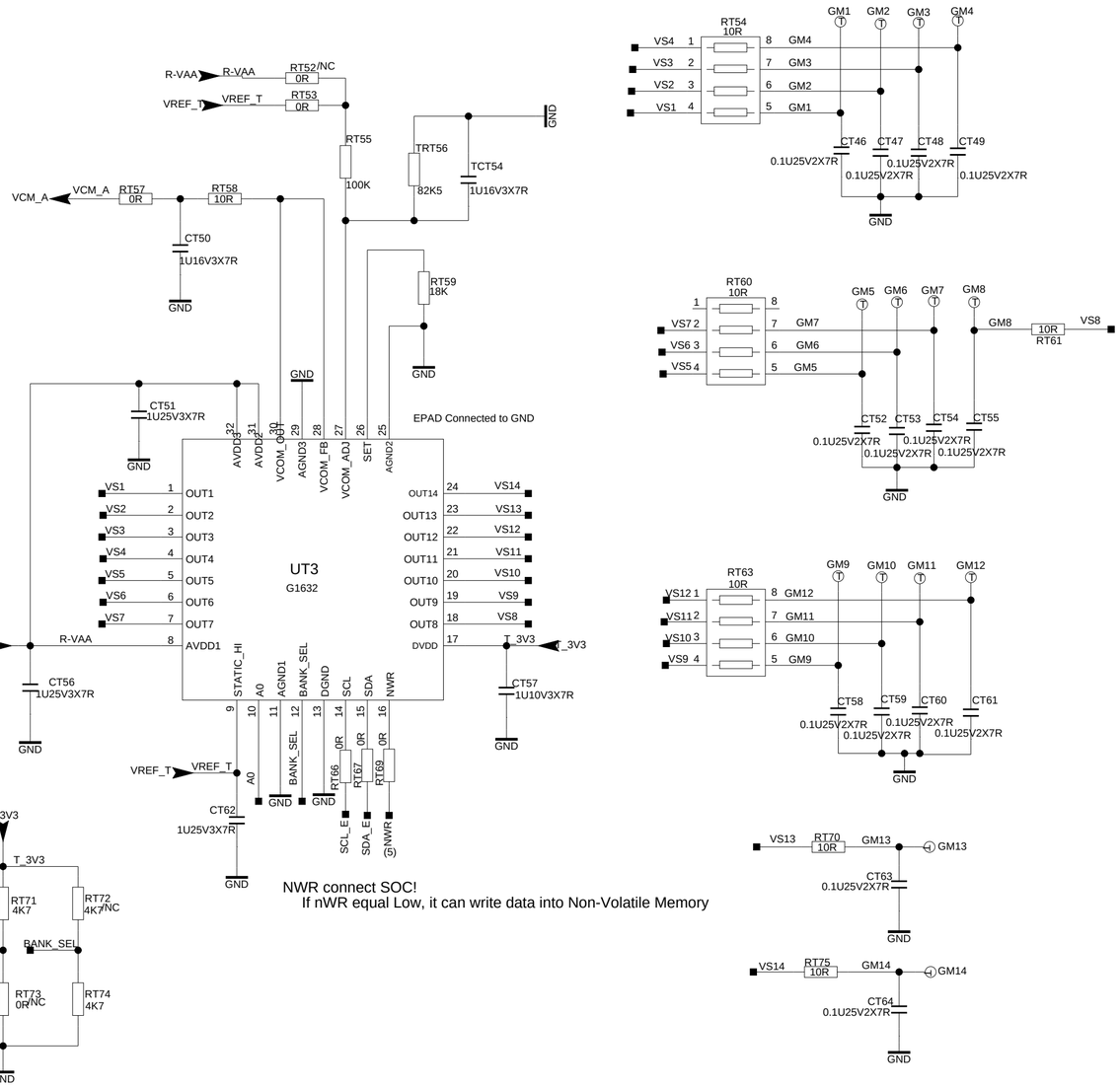

NWR connect SOC!
If nWR equal Low, it can write data into Non-Volatile Memory

If:A0 high I2C Address:0X75
If:A0 low I2C Address:0X74

TEST PAD

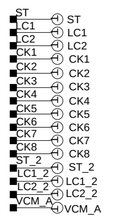

Can use diameter
of 1.0mm footprint
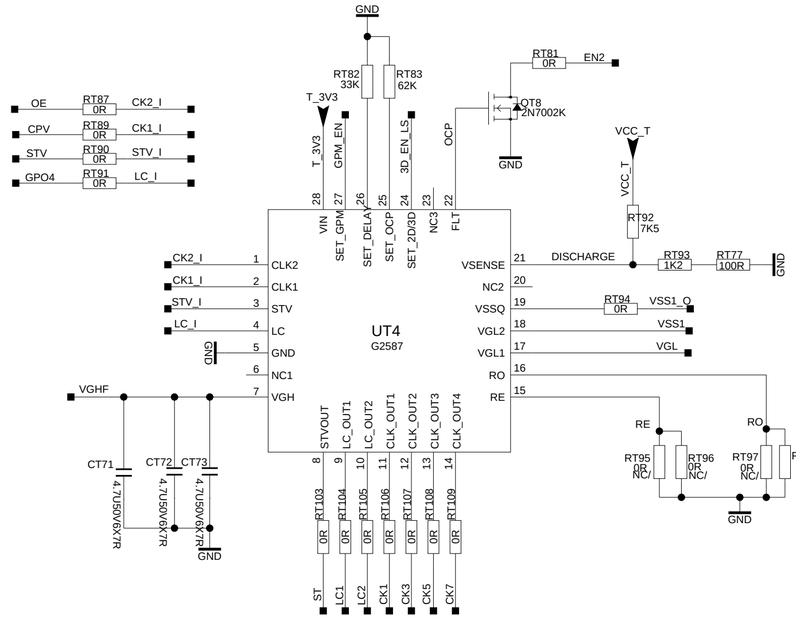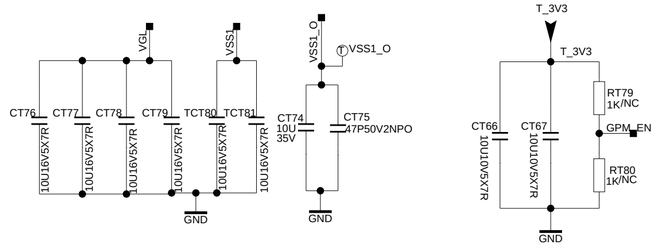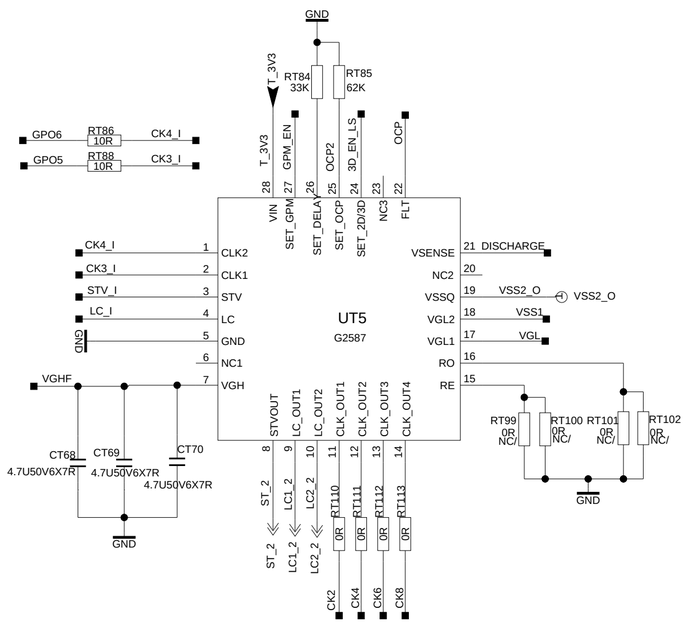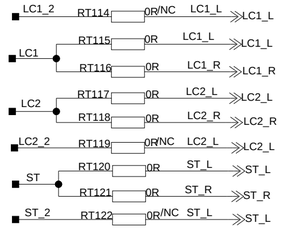
Channel Level Shifters